12/4/2016 **2017**

Date:_____ District:_____

CLASS: SHOWMANSHIP

HIGH SCHOOL:_____ ATHLETE #:_____

#	ELEMENT JUDGED:	COMMENTS:	Score
1.	Be ready at cone 'A', change sides, pick up trot on offside		
2.	Circle cone 'B' to left and continue to cone 'C'		
3.	Halt with horses hip even with cone 'C'		
4.	360° right forehand turn		
5.	Change to near side and back around cone 'C' in a smooth and round manner		
6.	90° right haunch turn, walk to judge		
7.	450° right haunch turn		
8.	Halt, setup for inspection		
9.	Trot straight, then continue around corner and halt when even with cone 'A'		
10.	Present horse, wait to be excused		
11..	Overall Showmanship		
Judge's Signature:_____			

Expectations:

- We are looking for the athlete to create a presence that convinces the judge and audience that their horse is the best, and that they have successfully completed every element of the pattern.
- Eye contact with the judge, crisp body communication, and facial expression are important.
- Changes of sides should allow the willingness of the horse to yield to the athlete under any condition.
- Condition of coat, feet, mane, and tail does count in this class. Handler and horse should be neat, clean and well groomed.
- Horse should display no resistance - lead rope and halter should be properly adjusted and appear to not be necessary in the horse's performance.
- Handler should not touch the horse to cue for movements. Athletes touching their horse should not expect a zero for that maneuver, but will be marked down.
- Correct hand positioning should be used to cue for each maneuver.
- Athletes may or may not change hands to back. Either is equally acceptable.

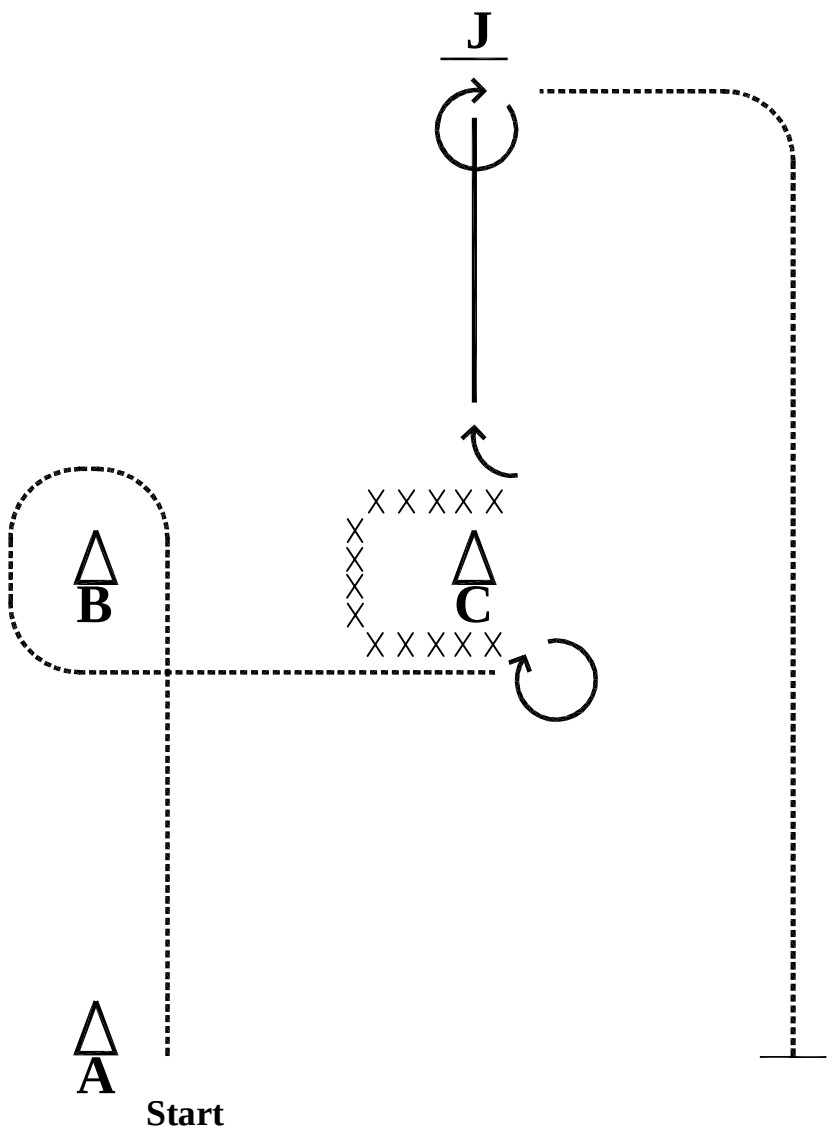

OHSET
2016-2017
Showmanship

Revised 11-27-16

Legend :	
Walk	————
Jog / Trot	----------
Back	X X X X X X
Sidepass	∪ ∪ ∪ ∪ ∪ ∪
Cone	Δ

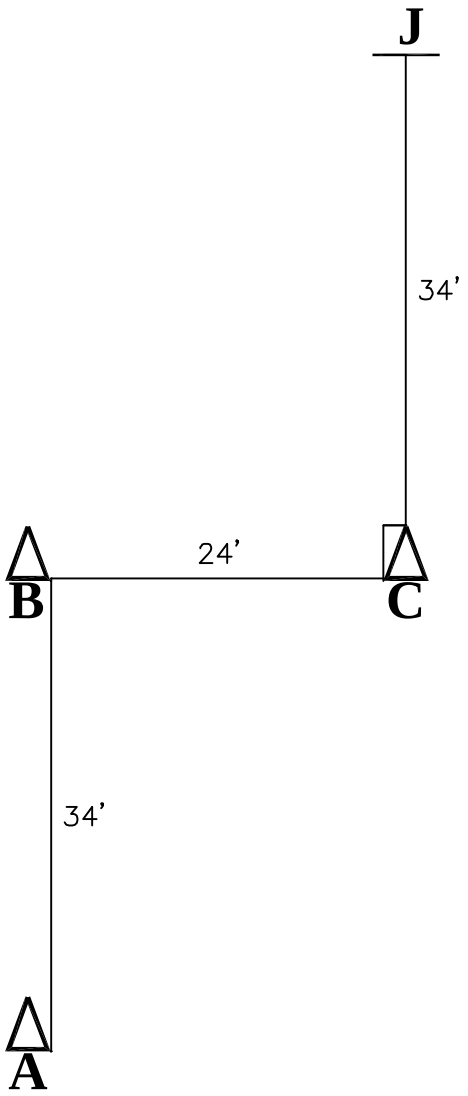

Note: Judge and Cone 'C' should be a minimum of 20' from wall

OHSET
2016-2017
Showmanship

Revised 9-11-16

Equipment:	
(3) Cones	Δ